SURFACE MOUNT TRANSIENT VOLTAGE SUPPRESSOR

Breskdown voltage: 5.0-170 Volts Peak pulse power: 600 Wallts

DO-214AA

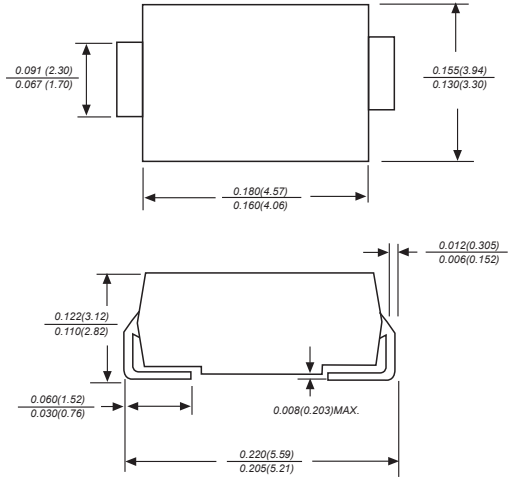

Dimensions in inches and (millimeters)

FEATURE

- Optimzed for LAN protection applications
- Ideal for ESD protection of data lines in accordance with IEC 1000-4-2(IEC801-2)
- Ideal for EFT protection of data lines in accordance with IEC1000-4-4(IEC801-2)
- Plastic package has Underwriters Laboratory Flammability Classification 94V-0
- Glass passivated junction
- 600w peak pulse power capability
- Excellent clamping capability
- Low incremental xurge resistance
- Fast response time:typically less than 1.0ps from 0v to $V_{(BR)}$ min
- High temperature soldering guaranteed: 265℃/10S at terminals

MECHANICAL DATA

Case: JEDEC DO-214AA molded plastic body over passivated junction
Terminals: Solder plated , solderable per MIL-STD 750, method 2026
Polarity: Color band denotes cathode except for bidirectional types
Mounting Position: Any
Weight: 0.005 ounce,0.138 grams

DEVICES FOR BIDIRECTIONAL APPLICATIONS

For bidirectional use suffix C or CA for types SMBJ5.0 thru SMBJ170 (e.g. SMBJ5.0C,SMBJ170CA)
Electrical characteristics apply in both directions.

MAXIMUM RATINGS AND CHARACTERISTICS

Ratings at 25℃ ambient temperature unless otherwise specified.

	SYMBOLS	*VALUE*	*UNITS*
Peak pulse power dissipation with a 10/1000μs wavetorm(NOTE 1,2,FIG.1)	P_{PPM}	Minimum 600	Watts
Peak forward surge current (Note 1,2,3)	I_{FSM}	100.0	Amps
Peak pulse current with a 10/1000μs waveform(NOTE 1)	I_{PPM}	See Table 1	Amps
Steady state power dissapation (Note 3)	$P_{M(AV)}$	5.0	Watts
Maximum instantaneous forward voltage at 50A(Note 3,4) unidirectional only	V_F	3.5/5.0	Volts
Operating junction and storage temperature range	T_{STG},T_J	-55 to + 150	°C

Notes: 1.Non-repetitive current pulse,per Fig.3 and derated above T_A=25°C per Fig.2
2.Mounted on 5.0mm² copper pads to each terminal
3.Measured on 8.3ms single half sine-wine.For uni-directional devices only.
4.VF=3.5V on SMB-5.0 thru SMB-90 devices and VF=5.0V on SMB-100 thru SMB-170 devices

ELECTRICAL CHARACTERISTICS (at T_A=25℃ unless otherwise noted)

Device	Devlce Marking Code		Working Peak Reverse Voltage V_{WM}(Volts)	Breakdown Voltage $V_{(BR)(NOTE1)}$ (Volts) at I_T		Test Current I_T(mA)	Maximum Clamping Voltage at I_{PPM} Vc (Volts)	Maximum Peak Pulse Reverse Current $I_{PPM(NOTE 2)}$ (Amps)	Maximum Reverse Leakage a $V_{WM(NOTE5)}$ I_D(μA)
	UNI	BI		MIN	MAX				
SMBJ5.0	KD	KD	5.0	6.40	7.81	10	9.6	62.5	800
SMBJ5.0A	KE	KE	5.0	6.40	7.08	10	9.2	65.2	800
SMBJ6.0	KF	KF	6.0	6.67	8.15	10	11.4	52.6	800
SMBJ6.0A	KG	KG	6.0	6.67	7.37	10	10.3	58.3	800
SMBJ6.5	KH	KH	6.5	7.22	8.82	10	12.3	48.8	500
SMBJ6.5A	KI	KI	6.5	7.22	7.98	10	11.2	53.6	500
SMBJ6.8A	KJ	KJ	6.8	7.56	8.35	10	11.7	51.3	400
SMBJ6.8CA	KK	KK	6.8	7.56	8.35	10	11.7	51.3	400
SMBJ7.0	KL	KL	7.0	7.78	9.51	10	13.3	45.1	200
SMBJ7.0A	KM	KM	7.0	7.78	8.60	10	12.0	50.0	200
SMBJ7.5	KN	AN	7.5	8.33	10.3	1.0	14.3	42.0	100
SMBJ7.5A	KP	AP	7.5	8.33	9.21	1.0	12.9	46.5	100
SMBJ8.0	KQ	AQ	8.0	8.89	10.9	1.0	15.0	40.0	50.0
SMBJ8.0A	KR	AR	8.0	8.89	9.83	1.0	13.6	44.1	50.0
SMBJ8.5	KS	AS	8.5	9.44	11.5	1.0	15.9	37.7	10.0
SMBJ8.5A	KT	AT	8.5	9.44	10.4	1.0	14.4	41.7	10.0
SMBJ9.0	KU	AU	9.0	10.0	12.2	1.0	16.9	35.5	5.0
SMBJ9.0A	KV	AV	9.0	10.0	11.1	1.0	15.4	39.0	5.0
SMBJ10	KW	AW	10.00	11.1	13.6	1.0	18.8	31.9	5.0
SMBJ10A	KX	AX	10.00	11.1	12.3	1.0	17.0	35.3	5.0
SMBJ11	KY	KY	11.00	12.2	14.9	1.0	20.1	29.9	5.0
SMBJ11A	KZ	KZ	11.00	12.2	13.5	1.0	18.2	33.0	5.0
SMBJ12	LD	BD	12.00	13.3	16.3	1.0	22.0	27.3	5.0
SMBJ12A	LE	BE	12.00	13.3	14.7	1.0	19.9	30.2	5.0
SMBJ13	LF	LF	13.00	14.4	17.6	1.0	23.8	25.2	5.0
SMBJ13A	LG	LG	13.00	14.4	15.9	1.0	21.5	27.9	5.0
SMBJ14	LH	BH	14.00	15.6	19.1	1.0	25.8	23.3	5.0
SMBJ14A	LK	BK	14.00	15.6	17.2	1.0	23.2	25.9	5.0
SMBJ15	LL	BL	15.00	16.7	20.4	1.0	26.9	22.3	5.0
SMBJ15A	LM	BM	15.00	16.7	18.5	1.0	24.4	24.6	5.0
SMBJ16	LN	LN	16.00	17.8	21.8	1.0	28.8	20.8	5.0
SMBJ16A	LP	LP	16.00	17.8	19.7	1.0	26.0	23.1	5.0
SMBJ17	LQ	LQ	17.00	18.9	23.1	1.0	30.5	19.7	5.0
SMBJ17A	LR	LR	17.00	18.9	20.9	1.0	27.6	21.7	5.0
SMBJ18	LS	BS	18.00	20.0	24.4	1.0	32.2	18.6	5.0
SMBJ18A	LT	BT	18.00	20.0	22.1	1.0	29.2	20.5	5.0
SMBJ20	LU	LU	20.00	22.2	27.1	1.0	35.8	16.8	5.0
SMBJ20A	LV	LV	20.00	22.2	24.5	1.0	32.4	18.5	5.0
SMBJ22	LW	BW	22.00	24.4	29.8	1.0	39.4	15.2	5.0
SMBJ22A	LX	BX	22.00	24.4	26.9	1.0	35.5	16.9	5.0
SMBJ24	LY	BY	24.00	26.7	32.6	1.0	43.0	14.0	5.0
SMBJ24A	LZ	BZ	24.00	26.7	29.5	1.0	38.9	15.4	5.0
SMBJ26	MD	CD	26.00	28.9	35.3	1.0	46.6	12.9	5.0
SMBJ26A	ME	CE	26.00	28.9	31.9	1.0	42.1	14.3	5.0
SMBJ28	MF	MF	28.00	31.1	38.0	1.0	50.0	12.0	5.0
SMBJ28A	MG	MG	28.00	31.1	34.4	1.0	45.4	13.2	5.0
SMBJ30	MH	CH	30.00	33.3	40.7	1.0	53.5	11.2	5.0
SMBJ30A	MM	CK	30.00	33.3	36.8	1.0	48.4	12.4	5.0

ELECTRICAL CHARACTERISTICS (at T_A=25℃ unless otherwise noted)

Device	Devlce Marking Code		Working Peak Reverse Voltage V_{WM}(Volts)	Breakdown Voltage $V_{(BR)}$(NOTE 1) (Volts) at I_T		Test Current I_T(mA)	Maximum Clamping Voltage at I_{PPM} Vc (Volts)	Maximum Peak Pulse Reverse Current I_{PPM}(NOTE 2) (Amps)	Maximum Reverse Leakage a V_{WM}(NOTE3) I_D(μA)
	UNI	BI		MIN	MAX				
SMBJ33	ML	CL	33.00	36.7	44.9	1.0	59.0	10.2	5.0
SMBJ33A	MM	CM	33.00	36.7	40.6	1.0	53.3	11.3	5.0
SMBJ36	MN	CN	36.00	40.0	48.9	1.0	64.3	9.3	5.0
SMBJ36A	MP	CP	36.00	40.0	44.2	1.0	58.1	10.3	5.0
SMBJ40	MQ	CQ	40.00	44.4	54.3	1.0	71.4	8.4	5.0
SMBJ40A	MR	CR	40.00	44.4	49.1	1.0	64.5	9.3	5.0
SMBJ43	MS	CS	43.00	47.8	58.4	1.0	76.7	7.8	5.0
SMBJ43A	MT	CT	43.00	47.8	52.8	1.0	69.4	8.6	5.0
SMBJ45	MU	CU	45.00	50.0	61.1	1.0	80.3	7.5	5.0
SMBJ45A	MV	CV	45.00	50.0	55.3	1.0	72.7	8.3	5.0
SMBJ48	MW	CW	48.00	53.3	65.1	1.0	85.5	7.0	5.0
SMBJ48A	MX	CX	48.00	53.3	58.9	1.0	77.4	7.8	5.0
SMBJ51	MY	CY	51.00	56.7	69.3	1.0	91.1	6.6	5.0
SMBJ51A	MZ	CZ	51.00	56.7	62.7	1.0	82.4	7.3	5.0
SMBJ54	ND	DD	54.00	60.0	73.3	1.0	96.3	6.2	5.0
SMBJ54A	NE	DE	54.00	60.0	66.3	1.0	87.1	6.9	5.0
SMBJ58	NF	DF	58.00	64.4	78.7	1.0	103.0	5.8	5.0
SMBJ58A	NG	DG	58.00	64.4	71.2	1.0	93.6	6.4	5.0
SMBJ60	NH	DH	60.00	66.7	81.5	1.0	107.0	5.6	5.0
SMBJ60A	NK	DK	60.00	66.7	73.7	1.0	96.8	6.2	5.0
SMBJ64	NL	DL	64.00	71.1	86.4	1.0	114.0	5.3	5.0
SMBJ64A	NM	DM	64.00	71.1	78.6	1.0	103.0	5.8	5.0
SMBJ70	NN	DN	70.00	77.8	95.1	1.0	125	4.8	5.0
SMBJ70A	NP	DP	70.00	77.8	86.0	1.0	113	5.3	5.0
SMBJ75	NQ	DQ	75.00	83.3	102	1.0	134	4.5	5.0
SMBJ75A	NR	DR	75.00	83.3	92.1	1.0	121	5.0	5.0
SMBJ78	NS	DS	78.00	86.7	106	1.0	139	4.3	5.0
SMBJ78A	NT	DT	78.00	86.7	95.8	1.0	126	4.8	5.0
SMBJ85	NU	DU	85.00	94.4	115	1.0	151	4.0	5.0
SMBJ85A	NV	DV	85.00	94.4	104	1.0	137	4.4	5.0
SMBJ90	NW	DW	90.00	100	122	1.0	160	3.8	5.0
SMBJ90A	NX	DX	90.00	100	111	1.0	146	4.1	5.0
SMBJ100	NY	DY	100.00	111	136	1.0	179	3.4	5.0
SMBJ100A	NZ	DZ	100.00	111	123	1.0	162	3.7	5.0
SMBJ110	PD	ED	110.00	122	149	1.0	196	3.1	5.0
SMBJ110A	PE	EE	110.00	122	135	1.0	177	3.4	5.0
SMBJ120	PF	EF	120.00	133	163	1.0	214	2.8	5.0
SMBJ120A	PG	EG	120.00	133	147	1.0	193	3.1	5.0
SMBJ130	PH	EH	130.00	144	176	1.0	231	2.6	5.0
SMBJ130A	PK	EK	130.00	144	159	1.0	209	2.9	5.0
SMBJ150	PL	EL	150.00	167	204	1.0	268	2.2	5.0
SMBJ150A	PM	EM	150.00	167	185	1.0	243	2.5	5.0
SMBJ160	PN	EN	160.00	178	218	1.0	287	2.1	5.0
SMBJ160A	PP	EP	160.00	178	197	1.0	259	2.3	5.0
SMBJ170	PQ	EQ	170.00	189	231	1.0	304	2.0	5.0
SMBJ170A	PR	ER	170.00	189	209	1.0	275	2.2	5.0

NOTES:

1. $V_{(BR)}$measured after I_T applied for 300μs,I_T=square wave pulse or equivalent
2. Surge current waveform per Fig.3 and derated per Fig.2
3. For bidirectional types having V_{WM} of 10 volts and less,the I_D limit is doubled
4. All items and symbols are consistent with ANSI/IEEE C62.35

FIG. 1-PEAK PULSE POWER RATING CURVE

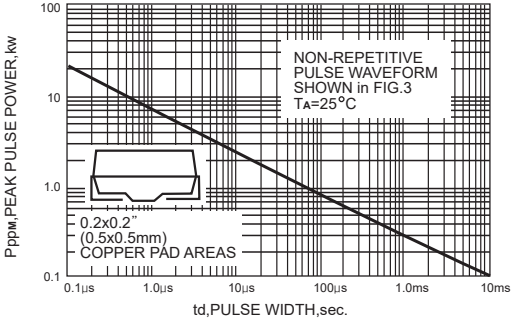

FIG. 2-PULSE DERATING CURVE

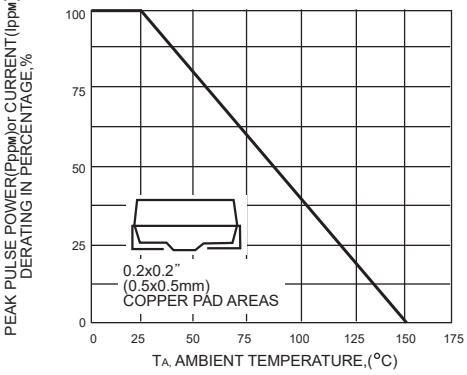

FIG.3-PULSE WAVEFORM

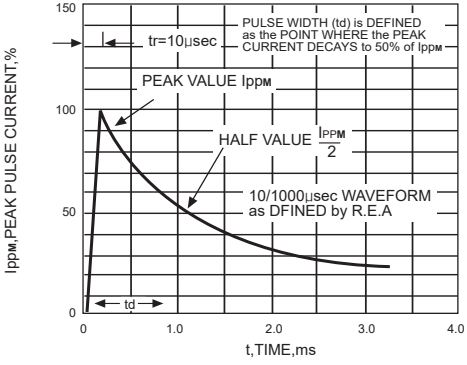

FIG. 4-TYPICAL JUNCTIONAL CAPACITANCE
UNIDIRECTIONAL

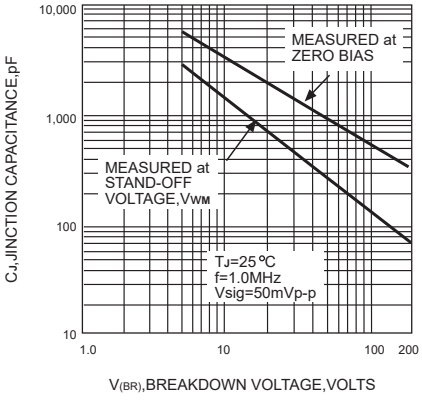

FIG.5-STEADY STATE POWER DERATING CURVE

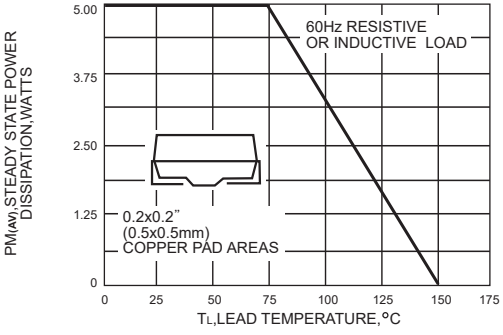
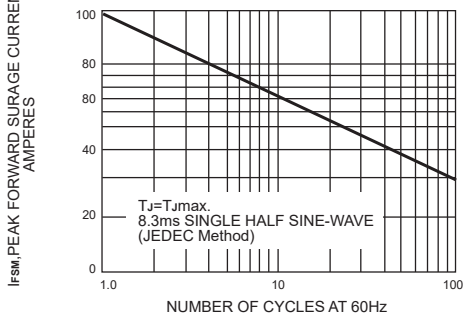
FIG.6-MAXIMUM NON-REPETITIVE FORWARD SURGE
CURRENT UNIDIRECTIONAL ONLY